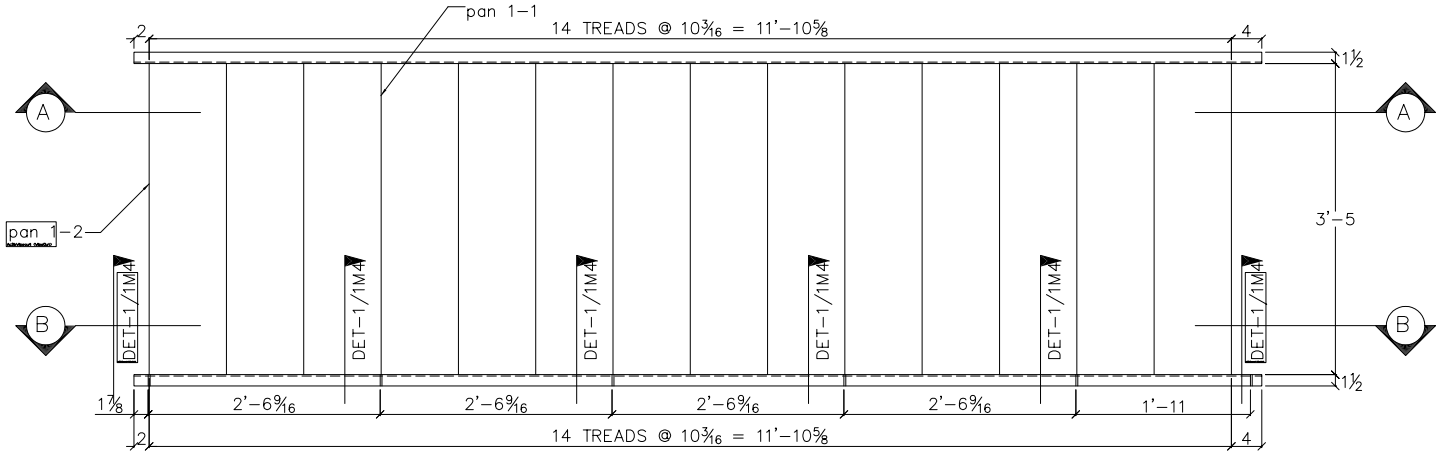

ONE – STAIR – 1S1M3

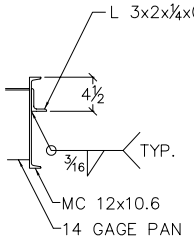

DETAIL – 1

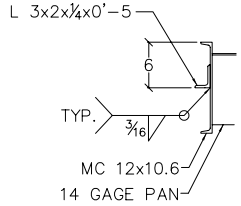

DETAIL – 2

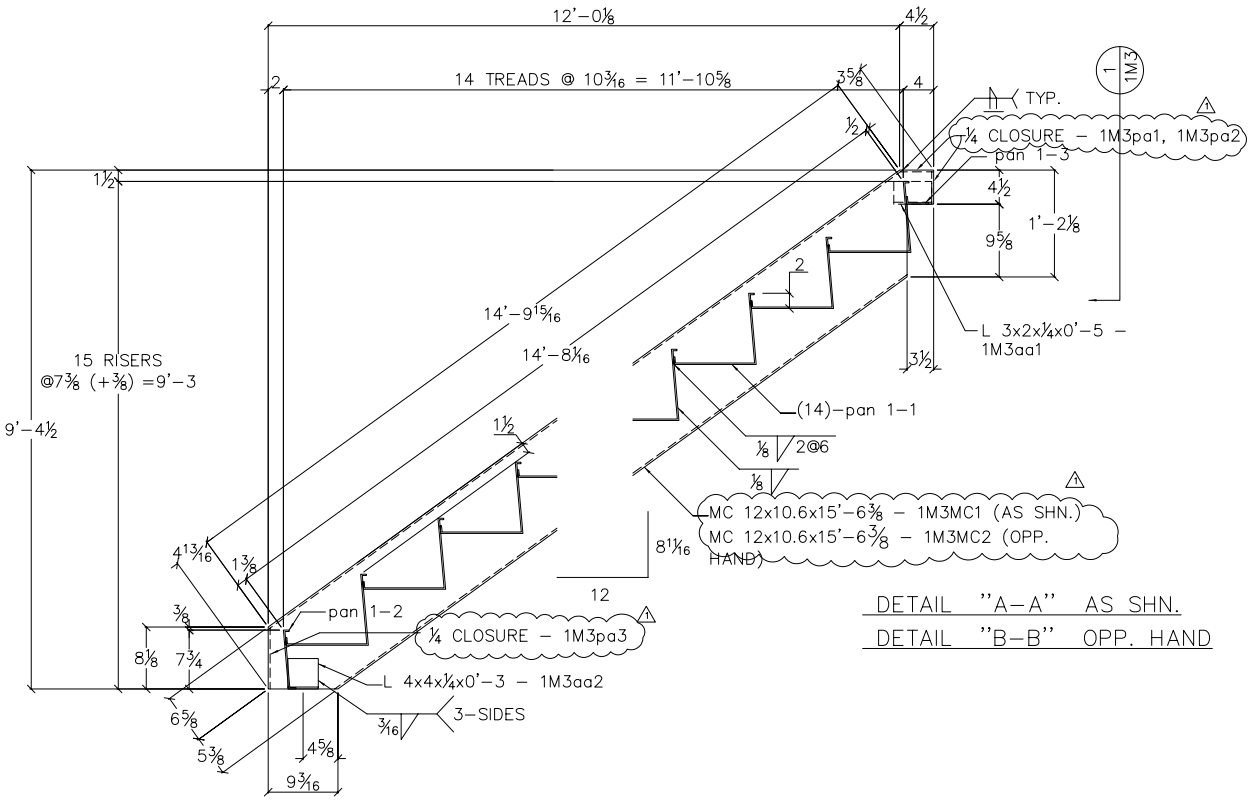

DETAIL "A–A" AS SHN.
DETAIL "B–B" OPP. HAND

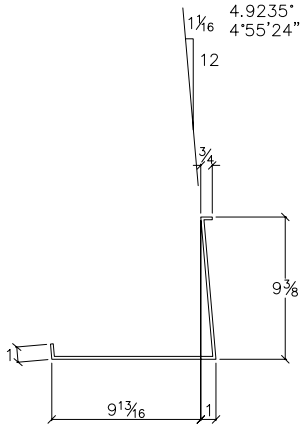

PAN – 1–1

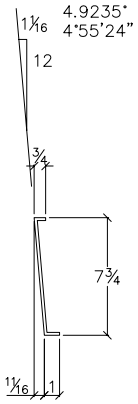

PAN – 1–2

REV	DATE	DESCRIPTION
1	09/27/2001	PIECE MARK ADDED BY AYU

SHOP NOTE: COPE RE–ENTRANT CORNERS TO MIN. 1/2" R.

SHOP CONN. U.N.O 5/16

SHOP PAINT:

JOB: CAPITAL COMMERCE CENTER
LOCATION: EAST 3rd & COMMERCE LITTLE ROCK, ARKANSAS
DWG TITLE:
ARCH./ENG: AMR ARCHITECTS INC.
CONTRACTOR: EAST HARDING
JOB NO. 01–158

SHOP CLEAN:	OPEN HLS:	DRAWN / DATE	CK'D / DATE	DWG NO:
	AS NOTED	TRQ / 08/23	AYU / 08/23	1M3