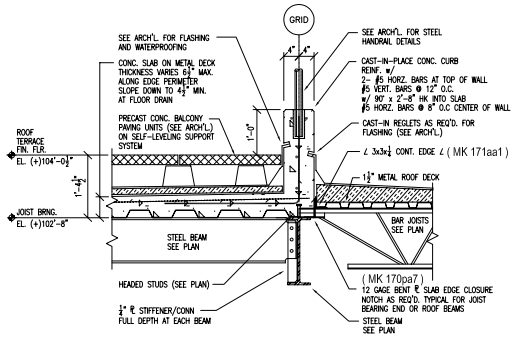

01 E22 DETAIL AT ROOF TERRACE CURB
SCALE : 3/4"=1'-0" (REF-01/S4.3)

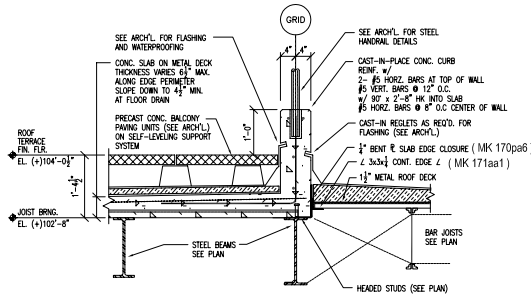

02 E22 DETAIL AT ROOF TERRACE CURB
SCALE : 3/4"=1'-0" (REF-02/S4.3)

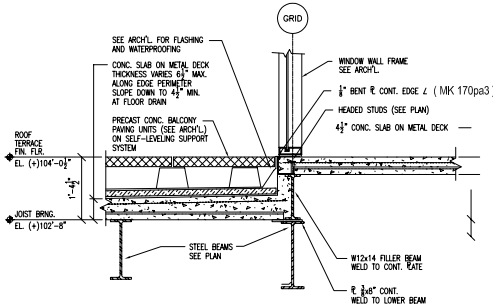

03 E22 ROOF TERRACE ELEVATOR LOBBY
SCALE : 3/4"=1'-0" (REF-03/S4.3)

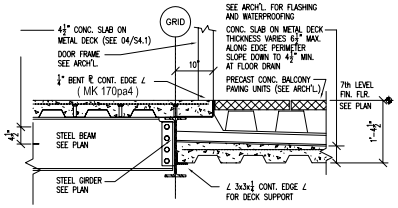

04 E22 BALCONY DETAIL AT GIRDER
SCALE : 3/4"=1'-0" (REF-09/4.3)

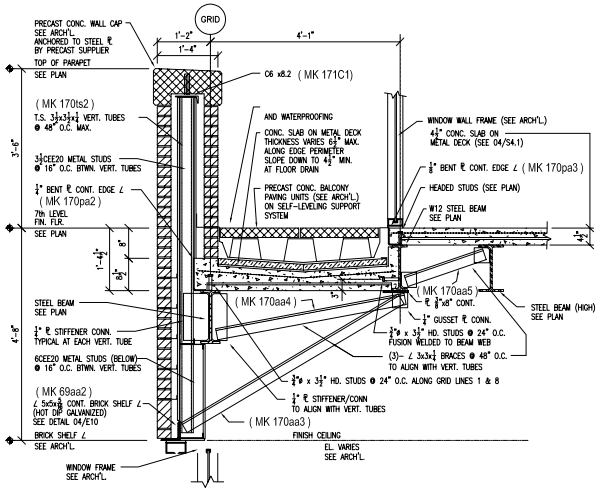

05 E22 DETAIL AT 7th FLOOR BALCONY
SCALE : 3/4"=1'-0" (REF-11/S4.3)

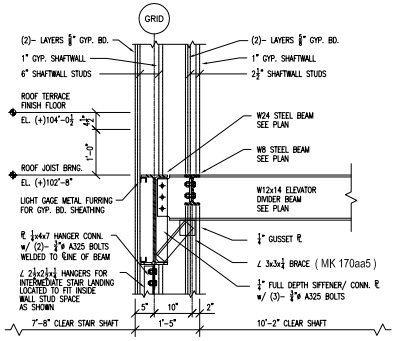

06 E22 BEAM BTWN. STAIR & ELEVATOR SHAFT
SCALE : 3/4"=1'-0" (REF- 04/S1.3)

JOB:	CAPITAL COMMERCE CENTER
LOCATION:	EAST 3rd & COMMERCE LITTLE ROCK, ARKANSAS
DWG TITLE:	
ARCH./ENG:	AMR ARCHITECTS INC.
CONTRACTOR:	EAST HARDING
JOB NO.	01-158

REVISIONS:

DRAWN / DATE	CK'D / DATE	DWG NO:
JUM / 09/19	AYU / 09/20	E22